Plastic shut-off damper

for aggressive media
Type AKK

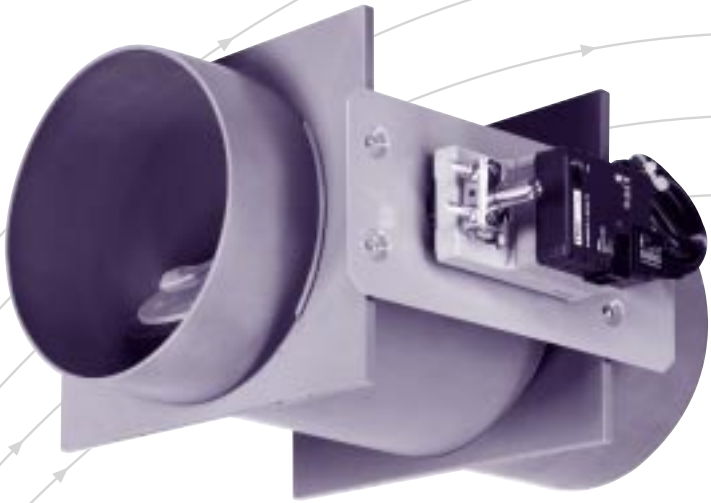

TROX® TECHNIK

TROX GmbH

Heinrich-Trox-Platz
D-47504 Neukirchen-Vluyn

Telephone +49/2845/202-0
Telefax +49/2845/202-265
e-mail trox@trox.de
www.troxtechnik.com

Cooke Industries - Phone: +64-9-579 2185 Fax: +64-9-579 2181 Email: sales@cookeindustries.co.nz Web: www.cookeindustries.co.nz

Contents · Description

Description 2
Construction · Dimensions 3
Order details 5

AKK, for manual operation

AKK, with electric actuator

TROX Type AKK shut-off dampers made of PPs plastic, are used to shut off volume flows in air conditioning systems. They can be fitted in duct systems subject to aggressive media as all parts in contact with air flow are made of plastic.

The materials used have been selected for their proven suitability in use. This does not however release the user from the need to check the suitability.

Shut-off damper is available with manual operation or with pneumatic or electric actuators. See order details or price list for further construction variations and accessories.

Cooke Industries - Phone: +64-9-579 2185 Fax: +64-9-579 2181 Email: sales@cookeindustries.co.nz Web: www.cookeindustries.co.nz

Characteristics

- For shut-off of volume flows
- Circular construction in 6 nominal sizes
- Damper closed blade leakage complies with DIN EN 1751, class 3
- Operation either pneumatic, electrical actuation (options available with spring return) or manual
- Maximum duct pressure 1500 Pa
- Mechanical parts maintenance-free
- Operating temperature range 10 ° to 50 °C

Constructional features

- With same connection diameter both ends (Standard construction)
- Option with flange on both ends
- Casing air leakage complies with DIN EN 1751, class B

Materials

- Casing and damper blade in flame resistant polypropylene (PPs), to DIN 4102, fire rating class B1
- Plain bearings in polypropylene (PP)
- Damper blade seals in chloroprene rubber (CR)

AKK, for manual operation

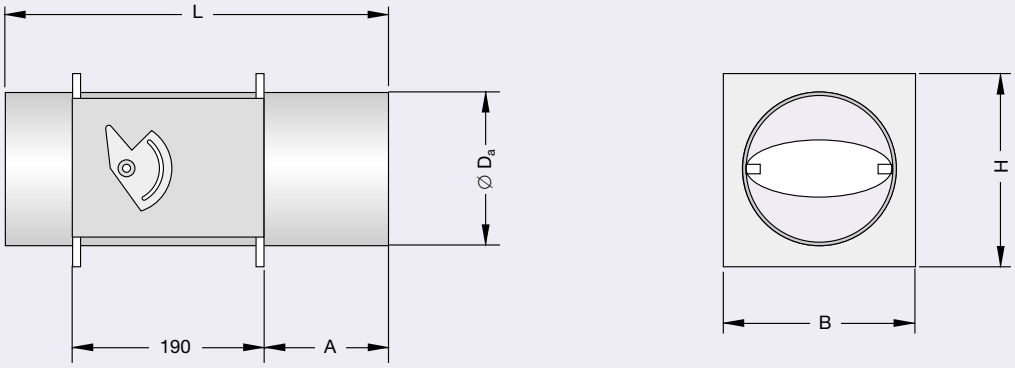

AKK, with an actuator

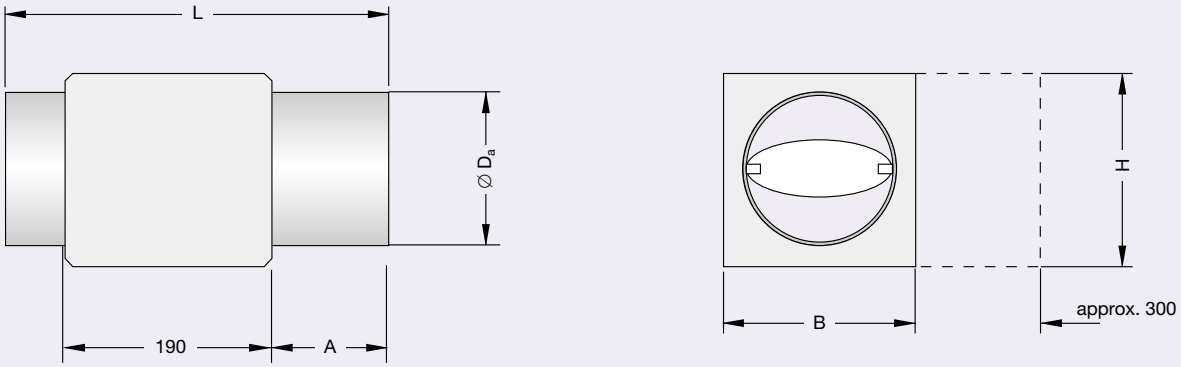

– – – Keep clear to provide access to actuator

AKK, construction with flanges

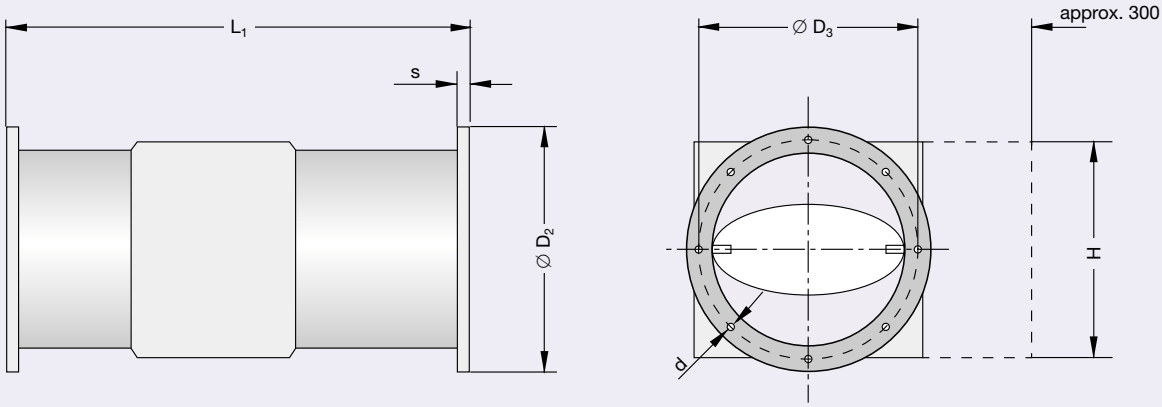

– – – Keep clear to provide access to actuator

Dimensions in mm												Weight in kg					
Nominal size	Ø D_a	L	B	H	A	Flange						without flange			with flange		
						L_1	Ø D_2	Ø D_3	s	Ø d	n[1)]	manual	electr.	pneum.	manual	electr.	pneum.
125	125	394	195	145	130	400	185	165	8	10	8	1.6	2.6	2.4	2.1	3.1	2.9
160	160	394	230	180	130	400	230	200	8	10	8	2.0	3.0	2.8	2.7	3.7	3.5
200	200	394	270	220	130	400	271	240	8	10	8	2.8	3.8	3.6	3.6	4.6	4.4
250	250	594	320	270	230	600	320	290	8	10	12	4.7	5.7	5.5	5.7	6.7	6.5
315	315	594	385	335	230	600	395	350	10	10	12	7.8	8.8	8.6	9.5	10.5	10.3
400	400	594	470	420	230	600	475	445	10	10	16	12.1	13.1	12.9	13.6	14.6	14.4

1) Number of flange holes

Specification text *

Circular construction shut-off damper in PPs plastic for shut off of volume flows in air conditioning systems with aggressive media, in 6 nominal sizes. All components in contact with air flow made of plastic. Consists of a casing with damper and factory fitted actuator, closed blade leakage complies with DIN EN 1751, class 3. With same connection diameter both ends. Casing air leakage complies with DIN EN 1751, class B. Suitable for duct pressures up to 1500 Pa. Damper control either pneumatic, electric or manual.

Materials:
Casing and damper blade in flame resistant polypropylene (PPs), plain bearings in polypropylene (PP), damper blade seal in chloroprene rubber (CR).

* Text for standard construction
For actuators, see design programme or price list

Order code

see price list

AKK	/	160	/		/	00H	/	

Type
Shut-off damper AKK

Flange
None, no entry required
Flange both ends -FL

125
160
200
250
315
400
Nom. size

Accessories
None, no entry required
GK Matching flange (both ends)

Damper operation
00H Manual
For pneumatic or electric actuators
see design programme or price list

Blade position
OPEN Blade position in case of power failure
CLOSED (pneumatic or electric spring return)
(no entry for manual operation or two position actuators)

Order example

Make: TROX
Type: AKK / 160 / 00H

Design changes reserved · All rights reserved © TROX GmbH (08/2008)